Biology Sciences Definition of LSTM

Long short-term memory (LSTM) in biological and cognitive science refers to a model of human memory distinguishing between:

- **Short-Term Memory (STM)** → holds limited information temporarily (seconds to minutes)
- **Long-Term Memory (LTM)** → stores vast amounts of information for extended periods (days to lifetime)

The Same Applies with AI

There is an architecture with the same name and idea.

LSTM Architecture

The Problem with Normal Recurrent Neural Networks (RNN)

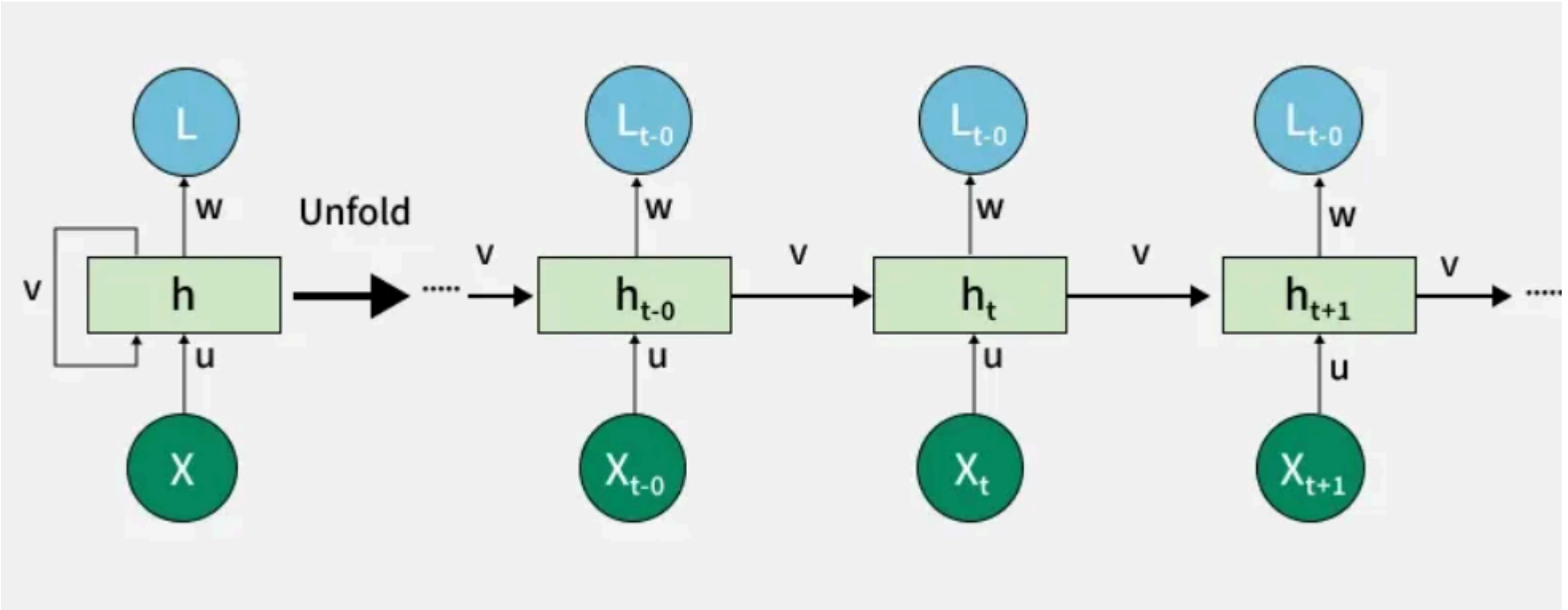

Recurrent Neural Network (RNN)

- **Vanishing Gradient**: During Backpropagation Through Time (BPTT), gradients shrink exponentially over many time steps, so the model can't learn long-term dependencies.
- **Exploding Gradient**: Gradients can become extremely large, causing unstable training and weight divergence.
- **Short-Term Memory**: Because of vanishing gradients, RNNs struggle to remember information from far earlier in a sequence.

Intuition Example (Sentence)

Sentence: `"The cat sat"`

Step-by-Step:

t = 1
Input: `"The"`
Memory becomes: context about `"The"`

t = 2
Input: `"cat"`
Memory becomes: context about `"The cat"`

t = 3
Input: `"sat"`
Memory becomes: context about full sentence

The model predicts the next word from the **final hidden state**.

The LSTM(Long Short-Term Memory)

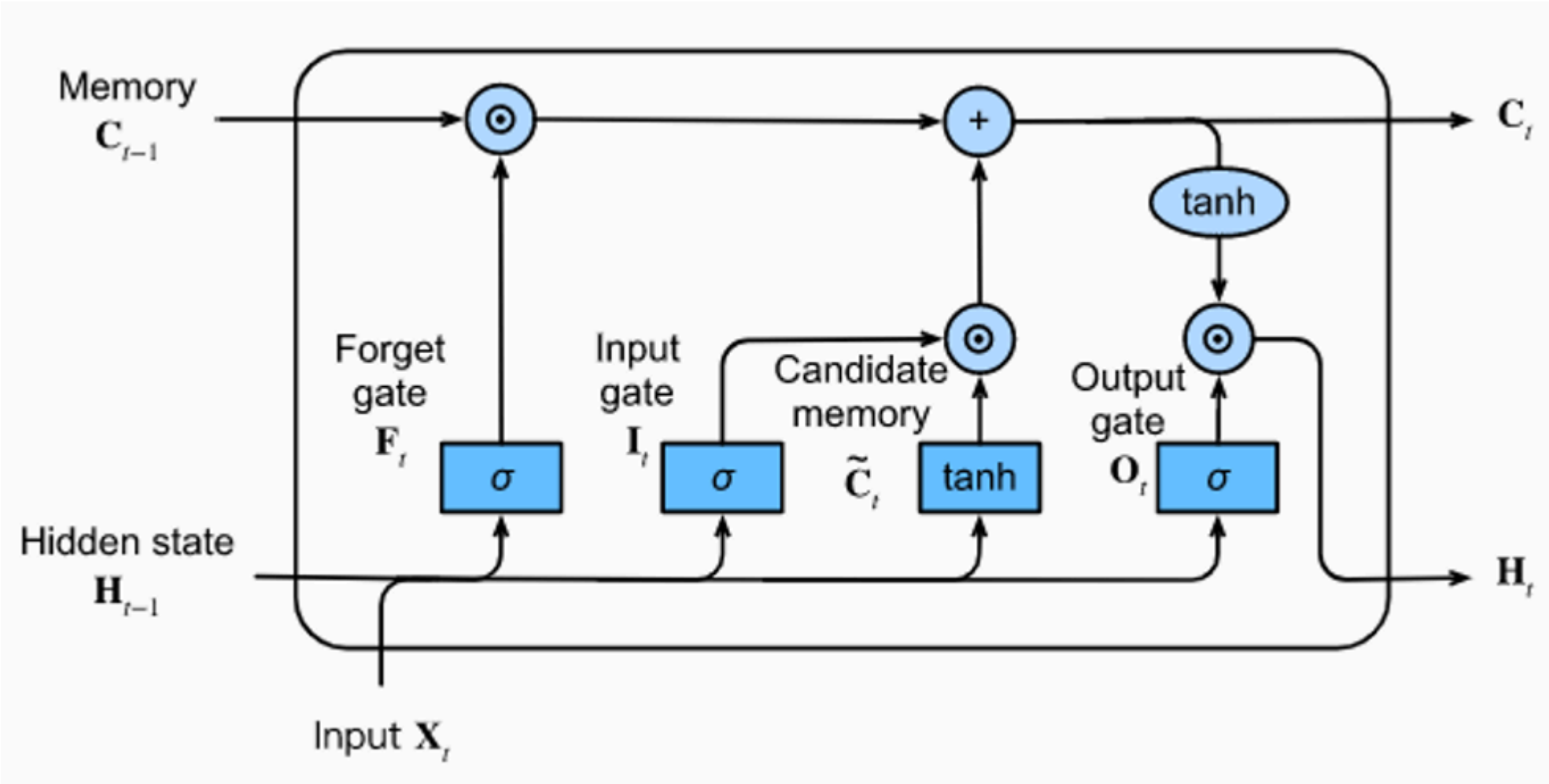

It has 3 main gates:

- Forget Gate (f_t)
- Input Gate (i_t) including Candidate Memory ($\tilde{C}_t$)
- Output Gate (o_t)

Inputs at Time Step t

$$x_t \quad \text{(current input vector)}$$
$$h_{t-1} \quad \text{(previous hidden state)}$$
$$C_{t-1} \quad \text{(previous cell state)}$$

---

1. Forget Gate

Decides what information to remove from the previous cell state:

$$f_t = \sigma\left(W_f[h_{t-1}, x_t] + b_f\right)$$

- Uses **sigmoid**
- Output: 0 → forget completely, 1 → keep completely

---

2. Input Gate

Decides how much new information to store:

$$i_t = \sigma\left(W_i[h_{t-1}, x_t] + b_i\right)$$

- Uses **sigmoid**
- Output: 0 → do not update, 1 → fully update

Candidate Memory

Creates new potential values to add to the cell state:

$$\tilde{C}_t = \tanh\left(W_C[h_{t-1}, x_t] + b_C\right)$$

- Uses **tanh**
- Output: -1 → 1

- Represents new candidate information

---

3. Cell State Update

$$C_t = f_t \odot C_{t-1} + i_t \odot \tilde{C}_t$$

- First term → forget part of old memory
- Second term → add new memory
- $\odot$ = element-wise multiplication

---

4. Output Gate

$$o_t = \sigma\left(W_o[h_{t-1}, x_t] + b_o\right)$$

Hidden state:

$$h_t = o_t \odot \tanh(C_t)$$

- Uses **sigmoid**
- Controls what information becomes the output

What Is the LSTM Output?

At each time step, LSTM produces:

$$h_t$$

- Vector
- Fixed dimension
- Contextual representation of everything remembered up to time t

---

Internal Memory vs Output Memory

1. Cell State (Long-Term Memory)

C_t

- Stores long-term information
- Decides what is remembered or forgotten
- Flows through time with minimal modification

---

2. Hidden State (Short-Term / Output Memory)

h_t

- Passed to next time step & output layer
- Computed as:

$$h_t = o_t \odot \tanh(C_t)$$

Conceptual Meaning

At time step t:

$$h_t \in \mathbb{R}^n$$

Encodes:

- Which words were forgotten
- Which words were remembered
- The current context of the sequence

Example

Sentence: `"The movie was not good"`

At word `"good"`, h_t encodes influence of `"not"` because:

$$C_t = f_t \odot C_{t-1} + i_t \odot \tilde{C}_t$$

- **Forget gate** → removes irrelevant memory
- **Input gate** → adds useful information
- **Output gate** → selects what becomes visible

Important Note: All of this happens inside **one LSTM cell repeated across time**, not multiple different LSTMs. Gates are described separately for conceptual clarity.

LSTM in [Sequence-to-Sequence Model (Seq2Seq)](#)(Encoder & Decoder)

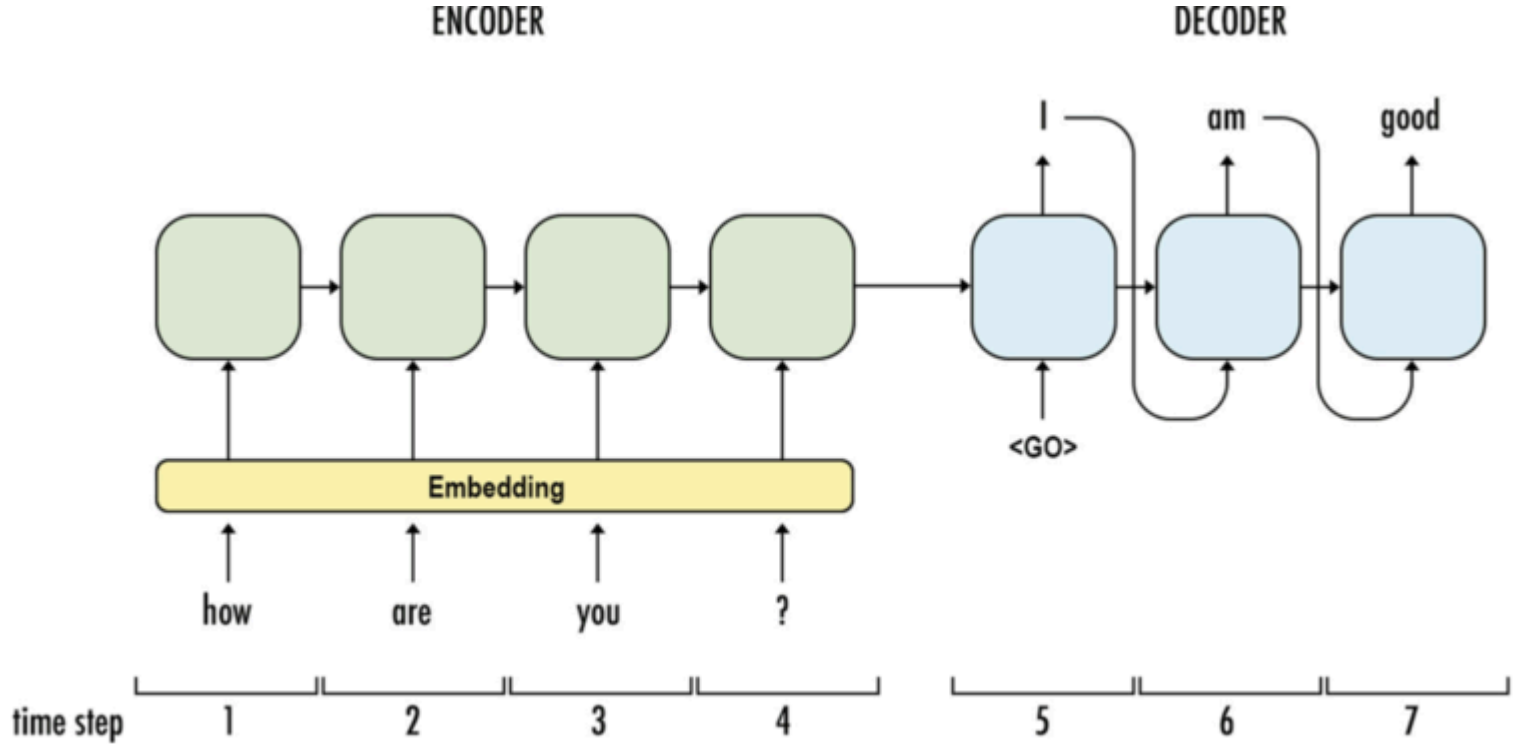

Encoder Reads Input Sequence

$$x_1, x_2, x_3, \ldots, x_T$$
$$C_t, \quad h_t$$
$$C_T, \quad h_T$$

represent the **compressed context**.

Intuition

- Forget unimportant details
- Keep important events
- Refine understanding

By the end: h_T is your final understanding.

Why This Works

Encoder final state h_T is passed to the decoder:

- Summarized context
- Refined memory
- Filtered important information

> Like explaining a movie after watching it: summarize only important parts.

Decoder LSTM

Initialize decoder:

$$h_0^{(dec)} = h_T^{(enc)}, \quad C_0^{(dec)} = C_T^{(enc)}$$

Given previous predicted word y_{t-1}:

$$h_t^{(dec)}, \quad C_t^{(dec)}$$

$$P(y_t \mid h_t^{(dec)})$$